REV.	REMARK	DATE	SIGN.
1	ASSIGNED A P/N 4439UW FOR ALEX CUSTOM	08/24/'15	Sino
2	CHANGE P.C.B.&CONNECTOR, REVISE CABLE	02/10/'17	Sino
3	CHANGE CONNECTOR TYPE, REVISED SIGNALS	11/20/'20	Sino

RoHS

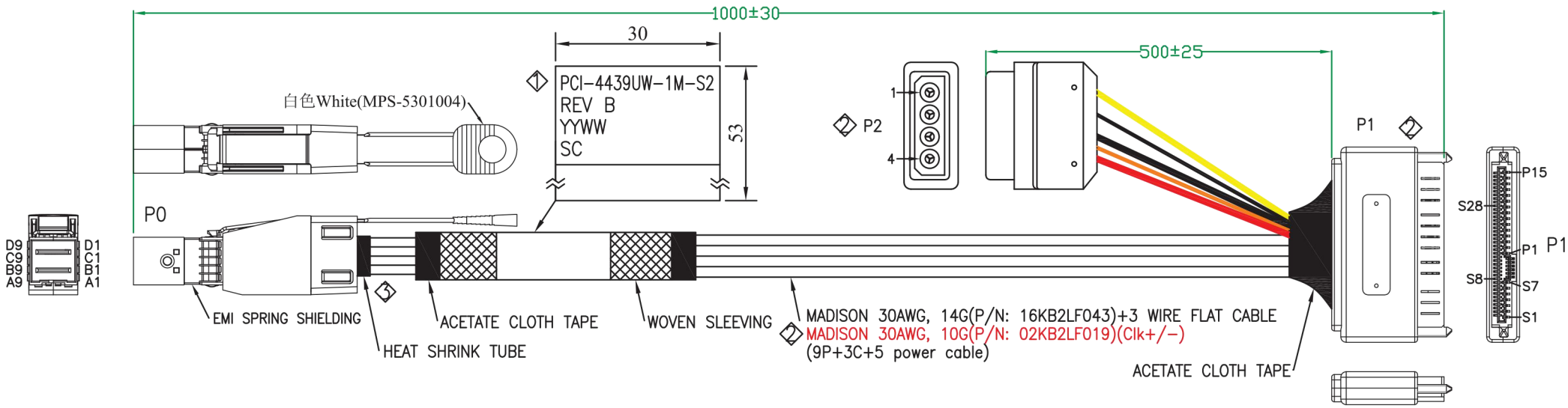

MATERIAL RoHS COMPLIANT:

1.CABLE: MADISON 30AWG, 14G(P/N: 16KB2LF043)
- CONDUCTOR: 30AWG SOLID SILVER PLATED COPPER.
- INSULATION: FOAM POLYOLEFIN.
- PAIR: 2 SINGLES LAID FLAT AND PARALLEL.
- PAIR DRAIN WIRE: 30AWG SOLID SILVER PLATED COPPER.
- PAIR SHIELD: ALUMINUM/POLYESTER TAPE, ALUMINUM SIDE FACING IN, 25% OVERLAP.
- INNER SHIELD: ALUMINUM/POLYESTER TAPE, ALUMINUM SIDE FACING OUT, 25% OVERLAP.
- DIFFERENTIAL IMPEDANCE: 100±5 OHMS @TDR
- UL LISTING: TYPE CL2 AS SPECIFIED IN ARTICLE 725 OF THE NATIONAL ELECTRICAL CODE.

2.CABLE: MADISON 30AWG, 10G(P/N: 02KB2LF019)

3.CONNECTOR:
P0: Mini SAS HD 4x CABLE PLUG (SFF-8644)
(1) P.C.B: 4 LAYERS, GOLD PLATING ON CONTACT PADS, WITHOUT CARBON (P/N: MPCB-060003LF REV.B / MPCB-060004LF REV.B)
(2) LATCH: STAINLESS STEEL
(3) BACKSHELL: ZINC DIE CASTING HOOD/ NICKEL PLATING
(4) PULL TAB: NYLON UL94V-0, COLOR: WHITE.
(5) EMI SPRING SHIELDING
P1: SFF-8639 68P CONNECTOR
(1) P.C.B: 4 LAYERS, GOLD PLATING ON CONTACT PADS.(SPCB-040152A)
(2) HOUSING: ABS, BLACK.
(3) WITHOUT EARS NOR SCREWS.
P2: 4 POSITION DC POWER PLUG
(1) P.C.B: SPCB-020054A
(2) POWER CABLE: UL 1007 18AWG*3 80°C 300V
(3) POWER CABLE: UL 1007 24AWG*2 80°C 300V

4.LABELING ON BAG:

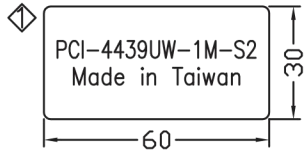

serial CABLES

DESC.	SFF8644 TO SFF8639 REC. WITH POWER CABLE ASS'Y			APPROVED	CHECKED	DESIGNED	TOLERANCE	SCALE	*	UNIT	mm
P/N	B-5229	CUSTOMER P/N	PCI-4439UW-1M-S2			Sino		DATE	11/20/'20	DWG NO:	DWG\B\5229

REV.	REMARK	DATE	SIGN.
1	ASSIGNED A P/N 4439UW FOR ALEX CUSTOM	08/24/'15	Sino
2	CHANGE P.C.B.&CONNECTOR, REVISE CABLE	02/10/'17	Sino
3	CHANGE CONNECTOR TYPE, REVISED SIGNALS	11/20/'20	Sino

CUSTOMER WIRING DIAGRAM

SFF-8644 PLUG(HOST) 3			Multifunction 12Gb/s 6x REC. as SAS MultiLink Cable REC. (TARGET) 3			4P POWER PLUG		
PLUG	PIN	SIGNAL	REC.	PIN	SIGNAL	PLUG	PIN	SIGNAL
P0	B7	PERp2	P1	E14	PERp0	P2		
	B8	PERn2		E13	PERn0			
	D8	PETn2		E11	PETn0			
	D7	PETp2		E10	PETp0			
	GND GROUP			GND GROUP				
	A4	PERp1		E21	PERp3			
	A5	PERn1		E20	PERn3			
	C5	PETn1		E18	PETn3			
	C4	PETp1		E17	PETp3			
	GND GROUP			GND GROUP				
	B4	PERp0		S21	PERp1			
	B5	PERn0		S20	PERn1			
	D5	PETn0		S18	PETn1			
	D4	PETp0		S17	PETp1			
	GND GROUP			GND GROUP				
	A7	PERp3		S27	PERp2			
	A8	PERn3		S26	PERn2			
	C8	PETn3		S24	PETn2			
	C7	PETp3		S23	PETp2			
	GND GROUP			GND GROUP				
				P13,P14,P15	+12V	1	+12V	YELLOW 18AWG
			2	P12	GND	2	GND	BLACK 24AWG
			2	P5,P6	GND	3	GND	BLACK 18AWG
				P7,P8,P9	+5V	4	+5V	RED 18AWG

3 LOW SPEED SIGNAL 3

	PIN	SIGNAL		PIN	SIGNAL	
P0	A1	VSP7		E8	REFCLK-	P1
	A2	VSP0		E7	REFCLK+	
	B2	Rsvd/Sel		E5	ePERst0#	
	C1	SCL		E23	SMClk	
	C2	SDA		E24	SMDat	
				E25	DualportEn#	
				E3	3.3Vaux	
				P4	IfDet#	
				P10	PRSNT#	

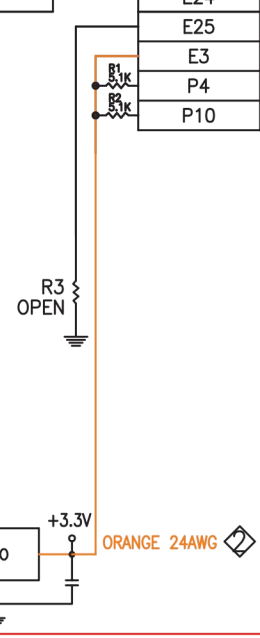

P0 GND GROUP:
A3,A6,A9,B3,B6,B9,
C3,C6,C9,D3,D6,D9.

P1 GND GROUP:
E9,E12,E15,E19,E22,S1,S4,S7
S8,S11,S14,S16,S19,S22,S25,S28

*SFF-8643: SINGAL BY SFF-9402 REV0.5
*SFF-8639: SINGAL BY SFF-9639 REV0.8

*客製化接點

DESC.	SFF8644 TO SFF8639 REC. WITH POWER CABLE ASS'Y			APPROVED	CHECKED	DESIGNED	TOLERANCE	SCALE	*	UNIT	mm
P/N	B-5229	CUSTOMER P/N	PCI-4439UW-1M-S2			Sino		DATE	11/20/'20	DWG NO:	DWG\B\5229

REV.	REMARK	DATE	SIGN.
1	ASSIGNED A P/N 4439UW FOR ALEX CUSTOM	08/24/'15	Sino
2	CHANGE P.C.B.&CONNECTOR, REVISE CABLE	02/10/'17	Sino

RoHS

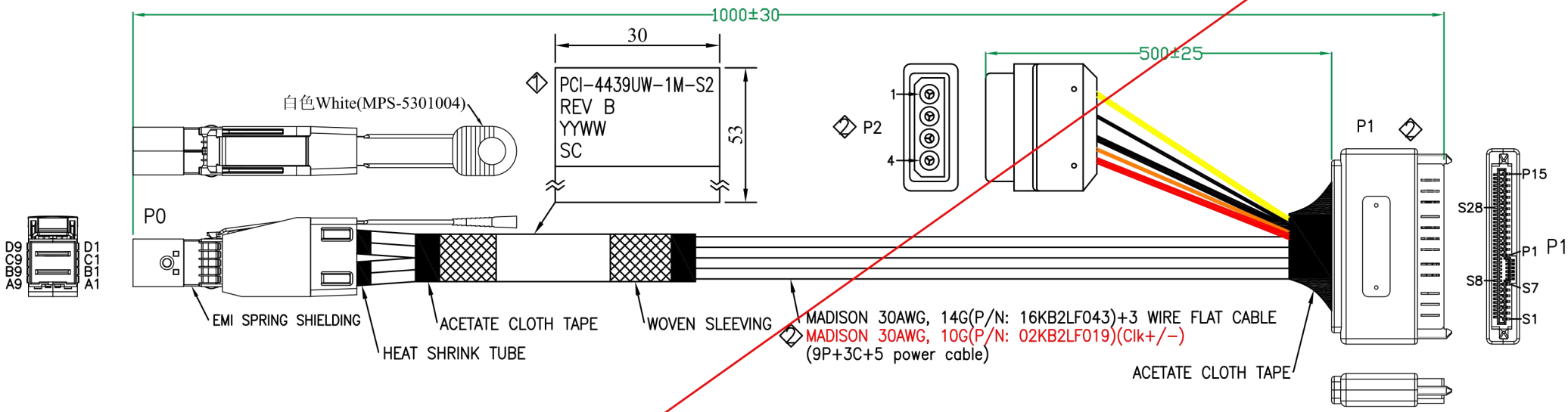

MATERIAL RoHS COMPLIANT:

1.CABLE: MADISON 30AWG, 14G(P/N: 16KB2LF043)
- CONDUCTOR: 30AWG SOLID SILVER PLATED COPPER.
- INSULATION: FOAM POLYOLEFIN.
- PAIR: 2 SINGLES LAID FLAT AND PARALLEL.
- PAIR DRAIN WIRE: 30AWG SOLID SILVER PLATED COPPER.
- PAIR SHIELD: ALUMINUM/POLYESTER TAPE, ALUMINUM SIDE FACING IN, 25% OVERLAP.
- INNER SHIELD: ALUMINUM/POLYESTER TAPE, ALUMINUM SIDE FACING OUT, 25% OVERLAP.
- DIFFERENTIAL IMPEDANCE: 100±5 OHMS @TDR
- UL LISTING: TYPE CL2 AS SPECIFIED IN ARTICLE 725 OF THE NATIONAL ELECTRICAL CODE.

2 2.CABLE: MADISON 30AWG, 10G(P/N: 02KB2LF019)

3.CONNECTOR:
P0: Mini SAS HD 4x CABLE PLUG (SFF-8644)
- (1) P.C.B: 4 LAYERS, GOLD PLATING ON CONTACT PADS, WITHOUT CARBON (P/N: MPCB-060003LF REV.B / MPCB-060004LF REV.B)
- (2) LATCH: STAINLESS STEEL
- (3) BACKSHELL: ZINC DIE CASTING HOOD/ NICKEL PLATING
- (4) PULL TAB: NYLON UL94V-0, COLOR: WHITE.
- (5) EMI SPRING SHIELDING

P1: SFF-8639 68P CONNECTOR
2 (1) P.C.B: 4 LAYERS, GOLD PLATING ON CONTACT PADS.(SPCB-040152A)
- (2) HOUSING: ABS, BLACK.
- (3) WITHOUT EARS NOR SCREWS.

2 P2: 4 POSITION DC POWER PLUG
- (1) P.C.B: SPCB-020054A
- (2) POWER CABLE: UL 1007 18AWG*3 80°C 300V
- (3) POWER CABLE: UL 1007 24AWG*2 80°C 300V

4.LABELING ON BAG:

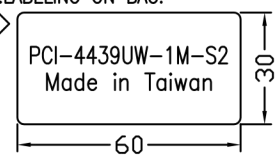

serial CABLES

DESC.	SFF8644 TO SFF8639 REC. WITH POWER CABLE ASS'Y			APPROVED	CHECKED	DESIGNED	TOLERANCE	SCALE	*	UNIT	mm
P/N	B-5229	CUSTOMER P/N	PCI-4439UW-1M-S2			Sino		DATE	02/10/'17	DWG NO:	DWG\B\5229

REV.	REMARK	DATE	SIGN.
1	ASSIGNED A P/N 4439UW FOR ALEX CUSTOM	08/24/'15	Sino
2	CHANGE P.C.B.&CONNECTOR, REVISE CABLE	02/10/'17	Sino

CUSTOMER WIRING DIAGRAM

SFF-8644 PLUG(HOST)			Multifunction 12Gb/s 6x REC. as SAS MultiLink Cable REC. (TARGET)			4P POWER PLUG				
PLUG	PIN	SIGNAL	REC.	PIN	SIGNAL	PLUG	PIN	SIGNAL		
P0	B7		P1	E14		P2				
	B8			E13						
	D8			E11						
	D7			E10						
	GND GROUP			GND GROUP						
	A4			E21						
	A5			E20						
	C5			E18						
	C4			E17						
	GND GROUP			GND GROUP						
	B4			S21						
	B5			S20						
	D5			S18						
	D4			S17						
	GND GROUP			GND GROUP						
	A7			S27						
	A8			S26						
	C8			S24						
	C7			S23						
	GND GROUP			GND GROUP						
				P13,P14,P15	+12V		1	+12V	YELLOW	18AWG
				P12	GND		2	GND	BLACK	24AWG
				P5,P6	GND		3	GND	BLACK	18AWG
				P7,P8,P9	+5V		4	+5V	RED	18AWG

LOW SPEED SIGNAL

	PIN	SIGNAL		PIN	SIGNAL	
P0	A1			E8		P1
	A2			E7		
	B2	Rsvd/Sel		E5	ePERst0#	
	C1	SCL		E23	SMClk	
	C2	SDA		E24	SMDat	
				E25	DualportEn#	
				E3	3.3Vaux	
				P4	IfDet#	
				P10	PRSNT#	

R1 5.1K
R2 5.1K
R3 OPEN
LDO
+3.3V
ORANGE 24AWG

P0 GND GROUP:
A3,A6,A9,B3,B6,B9,
C3,C6,C9,D3,D6,D9.

P1 GND GROUP:
E9,E12,E15,E19,E22,S1,S4,S7
S8,S11,S14,S16,S19,S22,S25,S28

*客製化接點

DESC.	SFF8644 TO SFF8639 REC. WITH POWER CABLE ASS'Y			APPROVED	CHECKED	DESIGNED	TOLERANCE	SCALE	*	UNIT	mm
P/N	B-5229	CUSTOMER P/N	PCI-4439UW-1M-S2			Sino		DATE	02/10/'17	DWG NO:	DWG\B\5229

REV.	REMARK	DATE	SIGN.
1	ASSIGNED A P/N 4439UW FOR ALEX CUSTOM	08/24/'15	Sino

RoHS

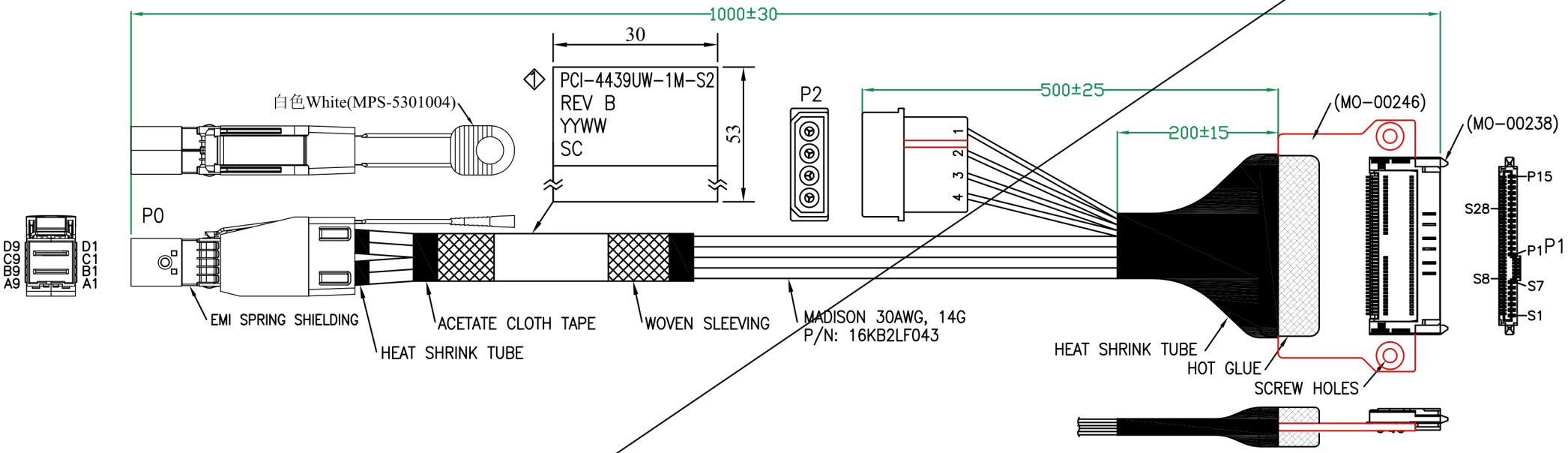

MATERIAL RoHS COMPLIANT:

1.CABLE SPEC:
- CONDUCTOR: 30AWG SOLID SILVER PLATED COPPER.
- INSULATION: FOAM POLYOLEFIN.
- PAIR: 2 SINGLES LAID FLAT AND PARALLEL.
- PAIR DRAIN WIRE: 30AWG SOLID SILVER PLATED COPPER.
- PAIR SHIELD: ALUMINUM/POLYESTER TAPE, ALUMINUM SIDE FACING IN, 25% OVERLAP.
- INNER SHIELD: ALUMINUM/POLYESTER TAPE, ALUMINUM SIDE FACING OUT, 25% OVERLAP.
- DIFFERENTIAL IMPEDANCE: 100±5 OHMS @TDR
- UL LISTING: TYPE CL2 AS SPECIFIED IN ARTICLE 725 OF THE NATIONAL ELECTRICAL CODE.

2.CONNECTOR:
- P0: Mini SAS HD 4x CABLE PLUG (SFF-8644)
  - (1) P.C.B: 4 LAYERS, GOLD PLATING ON CONTACT PADS, WITHOUT CARBON (P/N: MPCB-060003LF REV.B / MPCB-060004LF REV.B)
  - (2) LATCH: STAINLESS STEEL
  - (3) BACKSHELL: ZINC DIE CASTING HOOD/ NICKEL PLATING
  - (4) PULL TAB: NYLON UL94V-0, COLOR: WHITE(MPS-5301004)
  - (5) EMI SPRING SHIELDING
- P1: Multifunction 12Gb/s 6x REC.(SFF-8639)(MO-00238)
  - (1) P.C.B: 4 LAYERS, GOLD PLATING ON CONTACT PADS(SPCB-040145D)(MO-00246)
- P2: 4 POSITION DC POWER PLUG
  POWER CABLE: UL 1007 18AWG 80°C 300V

3.LABELING ON BAG:

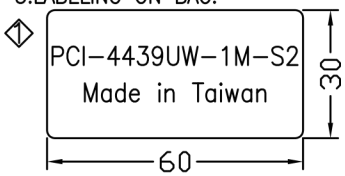

serial CABLES

DESC.	SFF8644 TO SFF8639 REC. WITH POWER CABLE ASS'Y			APPROVED	CHECKED	DESIGNED	TOLERANCE	SCALE	*	UNIT	mm
P/N	B-5229	CUSTOMER P/N	PCI-4439UW-1M-S2			Sino		DATE	08/24/'15	DWG NO:	DWG\B\5229

REV.	REMARK	DATE	SIGN.
1	ASSIGNED A P/N 4439UW FOR ALEX CUSTOM	08/24/'15	Sino

WIRING DIAGRAM

SFF-8644 PLUG(HOST)			Multifunction 12Gb/s 6x REC. as SAS MultiLink Cable REC. (TARGET)			4P POWER PLUG			
PLUG	PIN	SIGNAL	REC.	PIN	SIGNAL	PLUG	PIN	SIGNAL	
P0	B7		P1	E14		P2			
	B8			E13					
	D8			E11					
	D7			E10					
	GND GROUP			GND GROUP					
	A4			E21					
	A5			E20					
	C5			E18					
	C4			E17					
	GND GROUP			GND GROUP					
	B4			S21					
	B5			S20					
	D5			S18					
	D4			S17					
	GND GROUP			GND GROUP					
	A7			S27					
	A8			S26					
	C8			S24					
	C7			S23					
	GND GROUP			GND GROUP					
				P13,P14,P15	+12V		1	+12V	YELLOW
				P5,P6,P12	GND		2,3	GND	BLACK
				P7,P8,P9	+5V		4	+5V	RED

LOW SPEED SIGNAL

	PIN	SIGNAL		PIN	SIGNAL	
P0	A1			E8		P1
	A2			E7		
	B2	Rsvd/Sel		E5	ePERst0#	
	C1	SCL		E23	SMClk	
	C2	SDA		E24	SMDat	
				E25	DualportEn#	
				E3	3.3Vaux	
				P4	IfDet#	
				P10	PRSNT#	

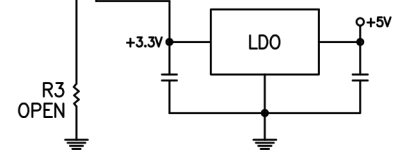

P0 GND GROUP:
A3,A6,A9,B3,B6,B9,
C3,C6,C9,D3,D6,D9.

P1 GND GROUP:
E9,E12,E15,E19,E22,S1,S4,S7
S8,S11,S14,S16,S19,S22,S25,S28

*客製化接點

serial CABLES	DESC.	SFF8644 TO SFF8639 REC. WITH POWER CABLE ASS'Y		APPROVED	CHECKED	DESIGNED	TOLERANCE	SCALE	*	UNIT	mm
	P/N	B-5229	CUSTOMER P/N	PCI-4439UW-1M-S2			Sino		DATE	08/24/'15	DWG NO:	DWG\B\5229

REV.	REMARK	DATE	SIGN.

RoHS

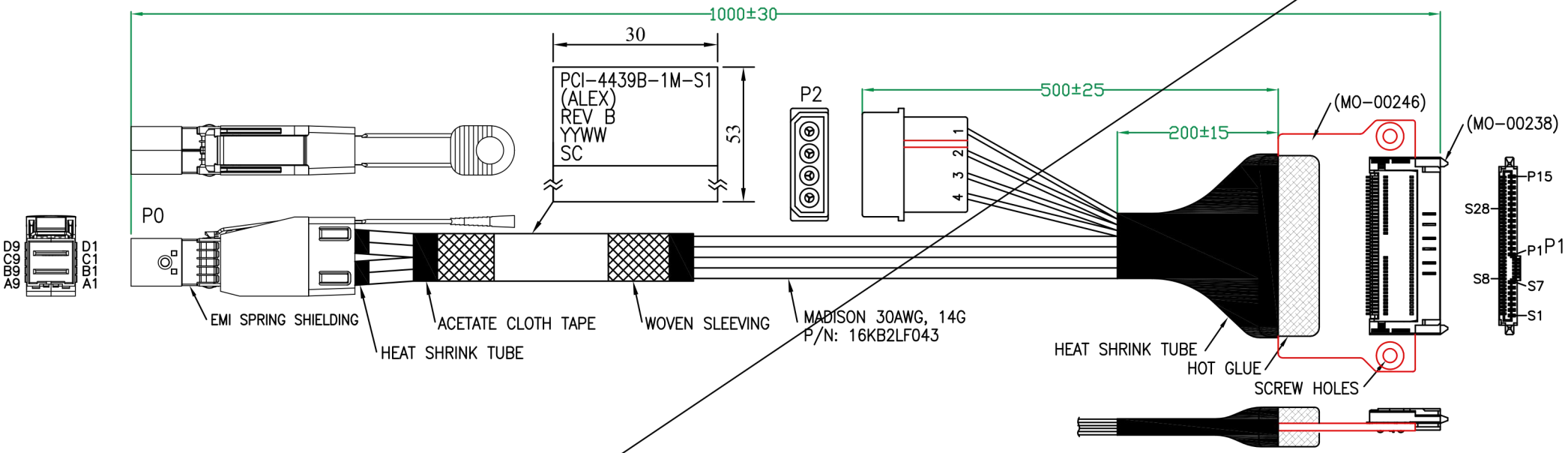

MATERIAL RoHS COMPLIANT:

1.CABLE SPEC:
- CONDUCTOR: 30AWG SOLID SILVER PLATED COPPER.
- INSULATION: FOAM POLYOLEFIN.
- PAIR: 2 SINGLES LAID FLAT AND PARALLEL.
- PAIR DRAIN WIRE: 30AWG SOLID SILVER PLATED COPPER.
- PAIR SHIELD: ALUMINUM/POLYESTER TAPE, ALUMINUM SIDE FACING IN, 25% OVERLAP.
- INNER SHIELD: ALUMINUM/POLYESTER TAPE, ALUMINUM SIDE FACING OUT, 25% OVERLAP.
- DIFFERENTIAL IMPEDANCE: 100±5 OHMS @TDR
- UL LISTING: TYPE CL2 AS SPECIFIED IN ARTICLE 725 OF THE NATIONAL ELECTRICAL CODE.

2.CONNECTOR:
- P0: Mini SAS HD 4x CABLE PLUG (SFF-8644)
  - (1) P.C.B: GOLD PLATING ON CONTACT PADS. (P/N: MPCB-060003LF REV.A / MPCB-060004LF REV.A)
  - (2) LATCH: STAINLESS STEEL
  - (3) BACKSHELL: ZINC DIE CASTING HOOD/ NICKEL PLATING
  - (4) PULL TAB: NYLON UL94V-0, COLOR: BLUE.
  - (5) EMI SPRING SHIELDING
- P1: Multifunction 12Gb/s 6x REC.(SFF-8639)(MO-00238)
  - (1) P.C.B: 4 LAYERS, GOLD PLATING ON CONTACT PADS(SPCB-040145D)(MO-00246)
- P2: 4 POSITION DC POWER PLUG
  - POWER CABLE: UL 1007 18AWG 80°C 300V

3.LABELING ON BAG:

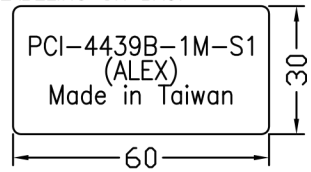

serial CABLES	DESC.	SFF8644 TO SFF8639 REC. WITH POWER CABLE ASS'Y		APPROVED	CHECKED	DESIGNED	TOLERANCE	SCALE	*	UNIT	mm
	P/N	B-5229	CUSTOMER P/N	PCI-4439B-1M-S1(ALEX)		Sino		DATE	08/21/'15	DWG NO:	DWG\B\5229

REV.	REMARK	DATE	SIGN.

WIRING DIAGRAM

SFF-8644 PLUG(HOST)			Multifunction 12Gb/s 6x REC. as SAS MultiLink Cable REC. (TARGET)			4P POWER PLUG			
PLUG	PIN	SIGNAL	REC.	PIN	SIGNAL	PLUG	PIN	SIGNAL	
P0	B7		P1	E14		P2			
	B8			E13					
	D8			E11					
	D7			E10					
	GND GROUP			GND GROUP					
	A4			E21					
	A5			E20					
	C5			E18					
	C4			E17					
	GND GROUP			GND GROUP					
	B4			S21					
	B5			S20					
	D5			S18					
	D4			S17					
	GND GROUP			GND GROUP					
	A7			S27					
	A8			S26					
	C8			S24					
	C7			S23					
	GND GROUP			GND GROUP					
				P13,P14,P15	+12V		1	+12V	YELLOW
				P5,P6,P12	GND		2,3	GND	BLACK
				P7,P8,P9	+5V		4	+5V	RED

LOW SPEED SIGNAL

	PIN	SIGNAL		PIN	SIGNAL	
P0	A1			E8		P1
	A2			E7		
	B2	Rsvd/Sel		E5	ePERst0#	
	C1	SCL		E23	SMClk	
	C2	SDA		E24	SMDat	
				E25	DualportEn#	
				E3	3.3Vaux	
				P4	IfDet#	
				P10	PRSNT#	

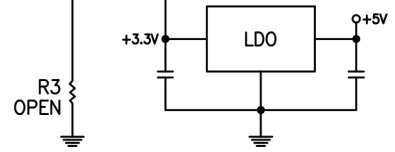

P0 GND GROUP:
A3,A6,A9,B3,B6,B9,
C3,C6,C9,D3,D6,D9.

P1 GND GROUP:
E9,E12,E15,E19,E22,S1,S4,S7
S8,S11,S14,S16,S19,S22,S25,S28

*客製化接點

serial CABLES	DESC.	SFF8644 TO SFF8639 REC. WITH POWER CABLE ASS'Y		APPROVED	CHECKED	DESIGNED	TOLERANCE	SCALE	*	UNIT	mm
	P/N	B-5229	CUSTOMER P/N	PCI-4439B-1M-S1(ALEX)			Sino		DATE	08/12/'15	DWG NO:	DWG\B\5229